AP47C

AUTOPILOT

Installation and Service Manual

Unit 18, 17 Rivergate Place
Murarrie QLD 4172

T: +61 07 3640 5600
E: tmq@tmq.com.au
www.tmq.com.au

IMPORTANT: PLEASE RETAIN ON BOARD

(This page intentionally left blank)

Contents

Warnings

- The autopilot is a navigational aid; an adequate watch must be maintained at all times when autopilot is in use.
- The autopilot must be placed in manual mode when the vessel is stationary as the system may continue to drive the rudder to the end of its travel and damage to the system may result.
- It is strongly recommended that the autopilot not be used while navigating in restricted waterways as water currents, wind changes or radio transmitter interference can endanger your own or other vessels.
- It is recommended to install a rudder feedback unit for best performance; otherwise the system will not operate in auto / gps mode unless the vessel is moving at a configurable minimum speed.

Important Installation Notes

- Access for wiring must be provided. cables will possibly need to be run or extended if required, to the vessels switchboard, AP47C display, e-compass, rudder feedback (if fitted) and drive unit.
- AP47C cables and equipment must be located as far as possible from transmitting equipment and cables (e.g. radio aerials and aerial cables, radars, inverters, ect) to prevent electro-magnetic-interference.
- The e-compass must be mounted a minimum distance of 1 meter from other magnetic compasses, radios, speakers, transmitting equipment or other products with magnetic properties, to avoid interference.
- The AP47C must have a direct connection to power supply via a 15 amp circuit breaker or a 15 amp fused circuit and an isolating switch.

Installation Tools Required

- Screwdrivers – flat blade and phillips head
- Side cutting pliers
- Wire strippers
- Spanners (various) or adjustable spanner
- 75mm hole saw
- Power drill + assortment of drill bits
- Multi meter (dvm)
- Ancillaries such as tape, terminal block, screws, cable ties, etc.

Overview

Standard Equipment

- AP47C CDU 'Control Display Unit'
- ELECOM - electronic compass / e-compass
- RFUS - rudder feedback unit (optional)

Additional Equipment Required (not standard supply)

1. Drive motor – to allow the AP47C to control the vessels steering system.

- Hydraulic steering systems with a helm pump and ram will require one of the following;
  - Reversing hydraulic motor/ pump-set, tapped into the existing hydraulic steering system or;
  - A constant running hydraulic pump with direction control solenoids.

A mechanical steering system will require;

- a reversing mechanical drive, connected to the existing steering ram mechanism.

2. Termination hardware;

- Terminal blocks (suitable for 0.75mm^2 and 2.5mm^2 cables)
- Circuit breaker / switch (15A rated)
- Wiring extension cables / ferrules / crimp lugs & related crimp tools
- 2c x 2.5mm^2 for extending motor and power cables (larger for long cable runs)
- 1 pair 0.75mm^2 for each nmea interface cable

System Block Diagram

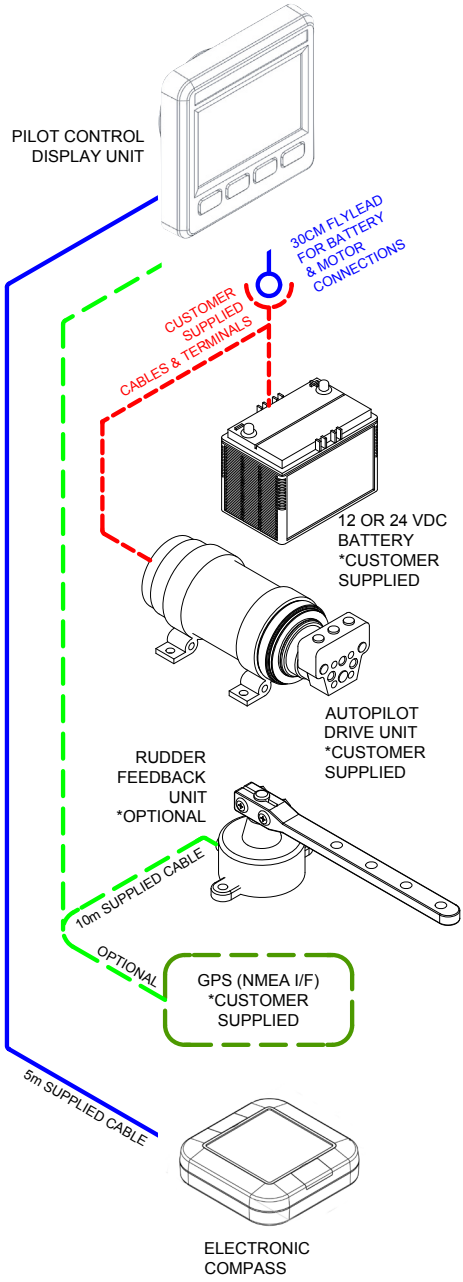

System Components / Installation Guides

AP47C - Control Display Unit

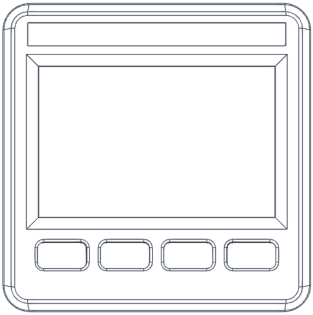

- Steering control system for 4.0m - 16m vessels;
- ‘Virtual Rudder Feedback’ feature, where no RFU requires to be installed.
- 3 Control Modes – Manual Mode, Auto Mode and GPS mode
- Live indication for ‘Steering mode’, ‘Position & Waypoint Info’, ‘Heading’, ‘Course to Steer’, ‘Rudder angle’, ‘System Voltage’ and ‘Drive Current’
- Supports all current NMEA-0183 interface standards;
- Heading: HDG, HDT, THS, HDM/ ROT & COG
- GPS: APA, APB, XTE, BOD, BWC & RTR *for GPS steering mode
- GLL, RMC, SOG, VTG *for visual indication and assisting AUTOPILOT control
- 30cm fly-lead for drive motor and power connections
- 6 pin LTW connectors for Compass and Rudder/NMEA-0183 interfaces
- Power: 12-24 Volts DC (Up to 29V During Charging)
- Drive output up to 35A. *If current exceeds 35A, the drive output is inhibited.
- Software controlled rudder limits, inhibits drive control at each mechanical limit.
- Additional auto switching fail safes, in case of failure of RFU or E-compass;
    - If RFU fails, the system will revert to Non-RFU mode automatically.
    - If a GPS system is connected and the standard supplied E-Compass fails, the AP47C system will automatically revert to GPS ‘COG’ mode for heading reference.

Installation

AP47C CDU Installation Dimensions

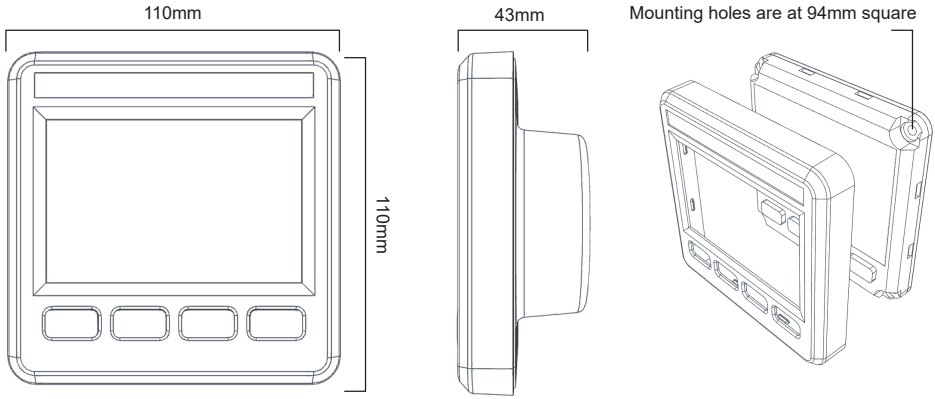

AP47C CDU Installation Guide

- The AP47C Head unit should be mounted in a position accessible to the steering position and protected from direct rain or salt water.
- For in dash mounting cut a 75mm (3.0”) hole
- An optional mounting bracket is available and may be used for desktop mounting - see your supplier
- Drill mounting screw holes
- Mount the display using screws supplied (304 SS – 6G)

NOTE: *Use the protection cover when the system is not in use, to protect the screen and casing from UV and other physical damage*

ELECOM Electronic Compass (E-Compass V.3)

Take care when handling the compass as it is a sensitive piece of equipment.

The compass position is the most important item in the installation of the autopilot. Good course holding is dependent on the compass being free from magnetic interference and excessive rolling or pitching.

E-Compass Specifications:

- Output based on NMEA 0183 standards
- Protocol Settings: 4800–8–N–1
- Output Sentences: HDM & ROT
- Power supply: 12-24 VDC <1Watt
- No moving parts to prevent mechanical wear-out, small size and high reliability.

- Solid state electronics with tilt and roll compensation up to 35degrees.

E-Compass Installation Guide:

- IMPORTANT! The compass must be fitted in an area at least 1 meter away from steel objects.
- Avoid positions near radios, speakers, aerials, antenna cables or any other current carrying cables.
- Select a dry position free from magnetic interference.
- If system is fitted to a steel hull vessel, the compass must be mounted at least 1m above the steel structure on a non-magnetic post or bracket (aluminium and wood are good options in this case)
- A lower / aft mounted position along the centre of the hull is preferred, to reduce the influence of vessel roll and pitch.
- Check other side of bulkheads and deck heads for magnetic interfering type objects before mounting.
- Mount the compass horizontally with the arrow (bow) pointing to the front of the vessel, preferably on a stainless steel, wooden or plastic bracket.
- Use non-magnetic screws to mount the compass unit (316 grade stainless steel)
- The unit must be mounted on a flat horizontal surface.
- Before selecting the E-compass installation position, it is good to test the installation position is free from interference by checking the location with a portable magnetic compass.

E-Compass Dimensions

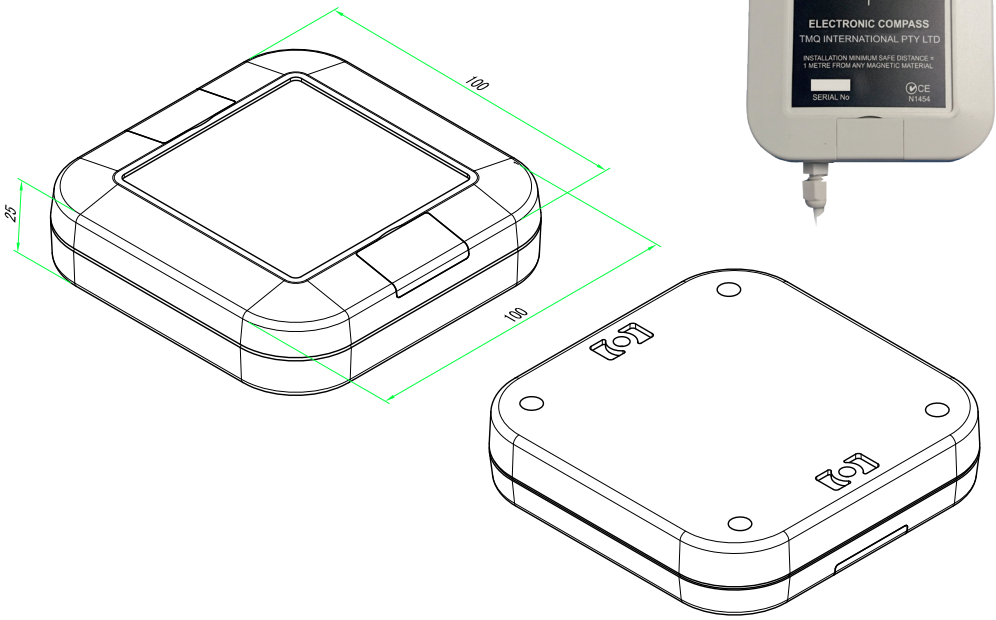

Rudder Feedback Unit

Rudder Feedback Unit (RFUS)

The RFU is optional, although recommended for the best possible performance on some types of vessels.
For example: A RFU must be installed on vessels with high sides that are sensitive to winds turning the boat, or high powered 5-6m Deep V (22-25 deg dead rise / 175HP+) type vessels used in rough seas and high winds. Or any other vessels that are overly sensitive and very responsive to small amounts of 'rudder' at high speeds.

When the RFU is installed, the configuration settings are simplified. Non-RFU mode is slightly more complicated.

NOTE: *The RFUS is factory aligned. The arm should not be removed or loosened. It is also water resistant, however, if mounted in a wet position some protection should be provided to prevent water damage or physical damage.*

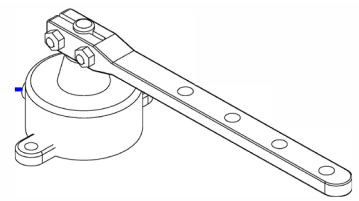

RFU Installation Guide

1. Refer to installation diagram and installation template supplied with the unit
2. Mount rudder feedback adjacent to the tiller (**NOTE**: *rudder feedback movement must copy the angular movement of the tiller like a pendulum*)
3. Use a mounting bracket if required.
4. Note the markings on the rudder feedback unit. 'P & S' (Port and Starboard) to check ruder moves in the correct direction, manually, before testing on the water.
5. Check installation is suitable by slowly moving the steering manually, to ensure:
   a. The direction indicated on the top of the RFU is correct
   b. No undue mechanical strain is placed on the feedback or linkage. (Also check for strain when the tiller is tilted upright (for outboard engine installations)
6. To complete the install, use the AP47C advanced menu to calibrate the rudder limits and centre point of the RFU.

Rudder Feedback Unit

Installation Diagram

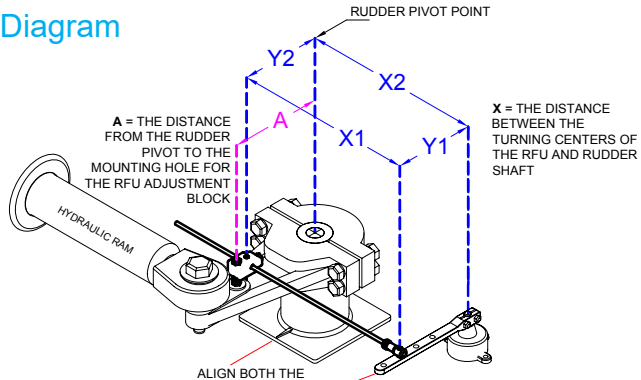

X1 = X2
Y1 = Y2
A = Y2 + 15mm
X < 325mm
Y = 55mm, 80mm, 105mm or 130mm

RECOMMEND USING 105mm DISTANCE

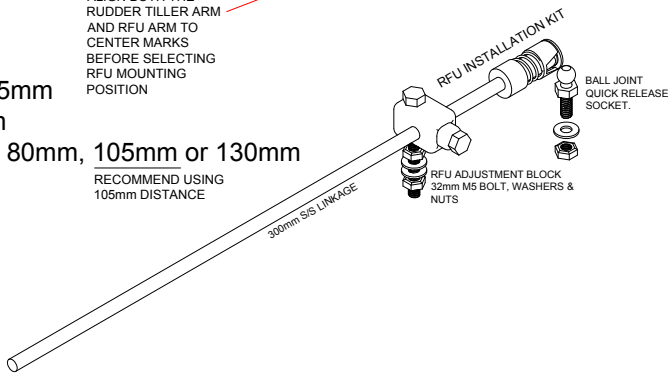

Example RFUS installations for outboard engines:

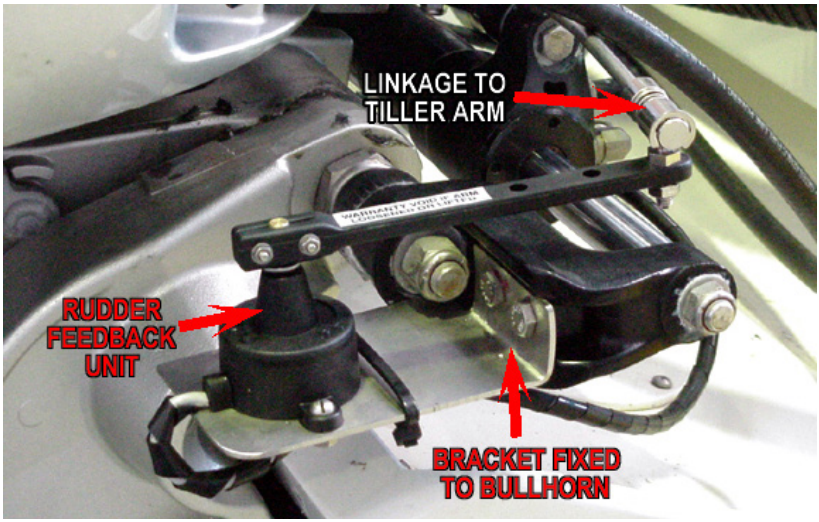

Rudder Feedback Unit

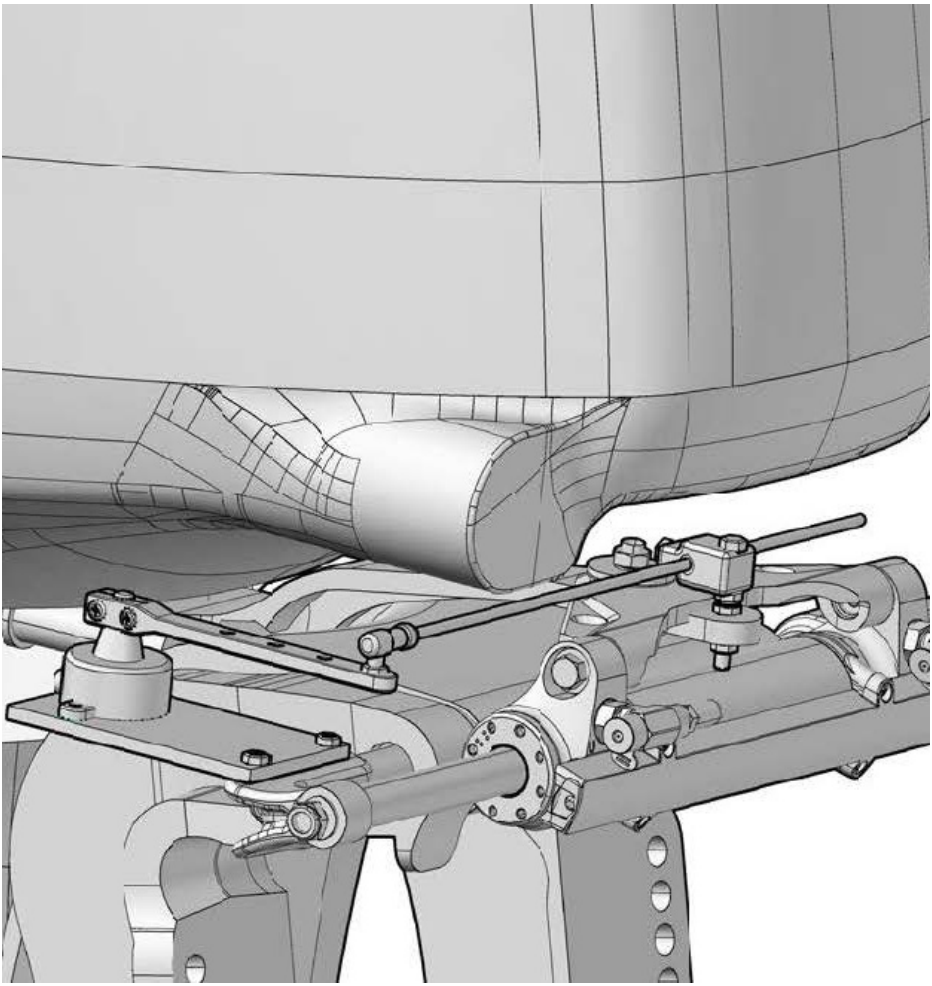

Installation & Wiring

Reversing pump or linear drive systems

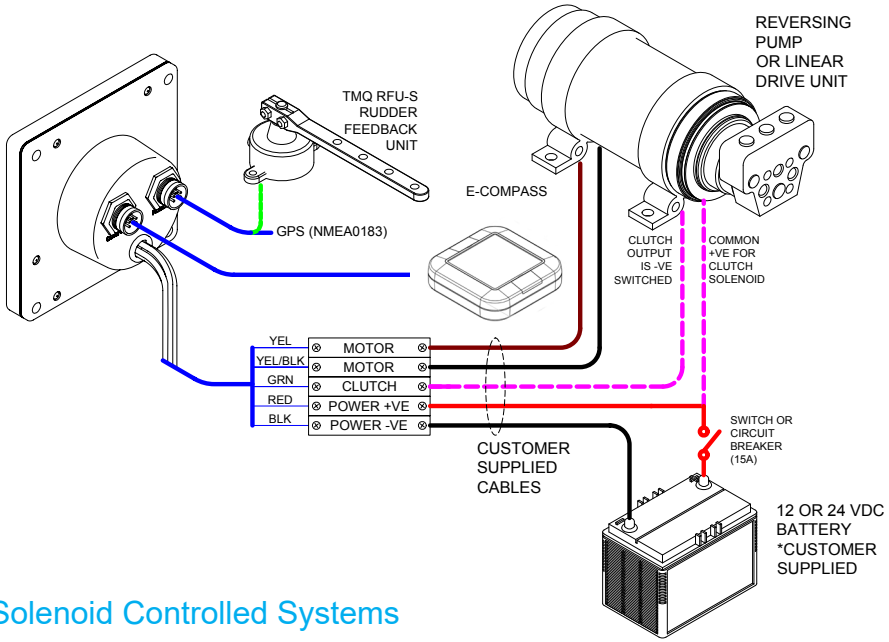

Solenoid Controlled Systems

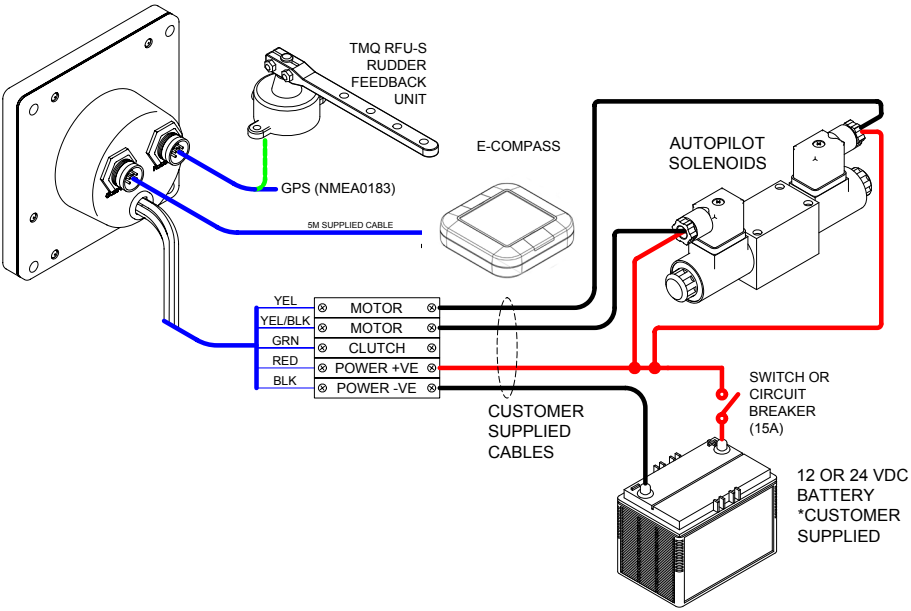

Wiring Information

Solenoid Valves - Important Information

If an emergency jog lever is fitted then the motor outputs must be isolated! to prevent damage to the drivers. To isolate, a 2 pole change over relay must be installed between the AP47C and the Solenoids, as per diagram below;

Also as a preventative measure to ensure voltage spikes do not interfere with the AUTOPILOT or other equipment, spike suppression diodes should be fitted on solenoid valves.

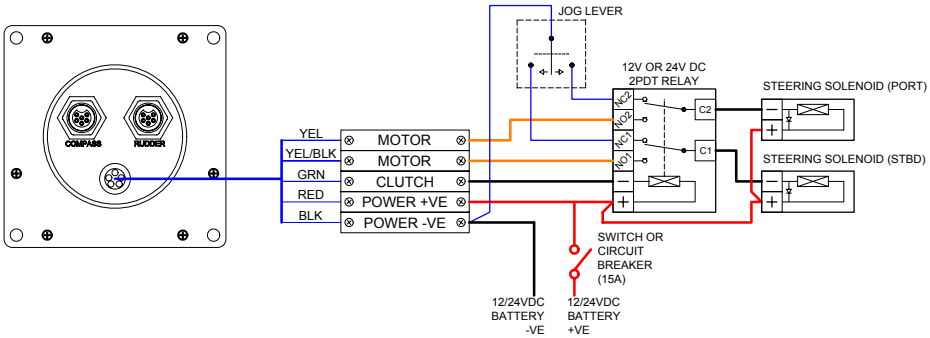

Rudder Connector

Pin connections from rear of plug, solder connection side.
NOTE: *Pin 1 has dot adjacent.*

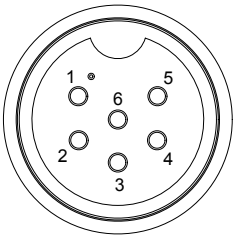

Pin 1 5V RFU Supply
Pin 2 RFU Wiper
Pin 3 0V RFU Supply / TX- RS-232 GND
Pin 4 TX+ RS-232 Data + (heading information)
Pin 5 + GPS Input (Positive)
Pin 6 - GPS Input (Negative)

Supplied GPS Cable (for NON-RFU models)

The standard system is supplied with a short 4 core 30cm fly-lead, for wiring direct to a GPS unit. See below for the color codes used for external connections;

NMEA input from GPS:
Pin 5 +GPS Input (Positive) White wire
Pin 6 - GPS Input (Return) Green wire

NMEA output for Heading data to external systems:
Pin 4 + Heading Data Out (Positive) - Red wire
Pin 3 - Heading Data Out (Negative) - Blue wire (0 volt line)

NOTE: *For further interfacing information, refer to the installation manual supplied with your GPS unit.*

Wiring Information - continued

Rudder Feedback Unit Wiring

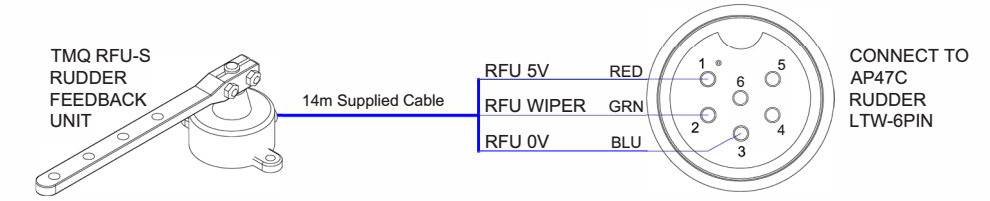

System Operation

Steering Modes

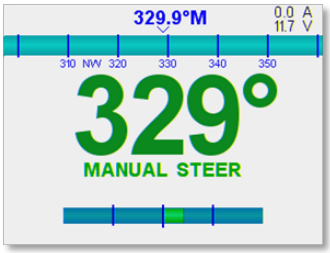

After initially powering on the system the AP47C will always return to MANUAL mode

If AUTO or GPS mode is active, press **AUTO** once to return.

To control the rudder manually in this mode, press;

◀ To drive the rudder to PORT

▶ To drive the rudder to STBD

AUTO MODE

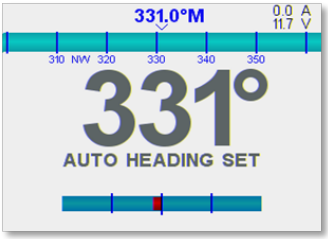

To enter AUTO mode, press the **AUTO** button

To change / set the desired course to steer, press ◀ or ▶ to increase or decrease the desired heading value to steer to.

To disengage AUTO mode, press **AUTO** to return to Manual Mode.

Continued next page

Steering Modes - Continued

GPS MODE

To enter GPS mode, press both MODE & AUTO simultaneously Before enabling this mode, ensure the GPS system has an activated waypoint, cursor or route, for the AP47C to follow. The boat will change course to steer at the maximum rate of turn, so it is recommended to ensure the vessel is heading towards the first GPS target at a suitable speed before enabling.

To disengage GPS mode, press AUTO to return to Manual Mode.

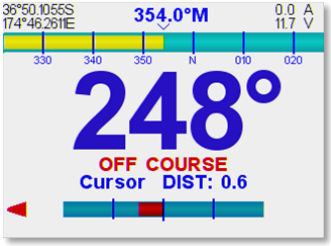

In this mode, the AUTOPILOT must be interfaced to a GPS generating NMEA 0183 data output The GPS will also require configuration to ensure correct sentences and settings are suitable.

To **DODGE** an obstacle while in GPS Mode Press;

◀ To dodge by steering the vessel to PORT

▶ To dodge by steering the vessel to STBD

Display Screens

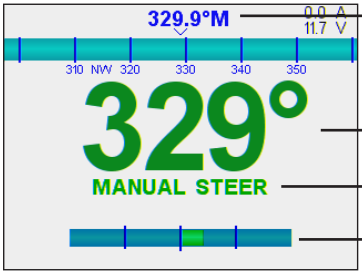

Live Compass Heading
Live Compass Bar Graph
Live Compass Heading
Active Mode Indication
Rudder Angle Indication

Manual Mode

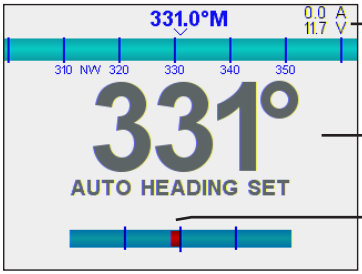

System Voltage
& Drive Current
Set Target Heading
Rudder Angle

Auto Mode

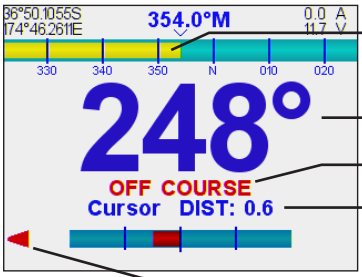

GPS Position (LAT/LONG)
Amount of Deviation from
Target Heading
Target Heading
Active Alarms
Distance to Desired
Waypoint
Port Drive Motor Engaged

GPS Mode

NOTE: *Rudder Angle indication will not be displayed in Non-RFU mode.*

Motor Drive Concept

During AUTO or GPS modes, the system will pulse the drive motor when it is close to the desired target heading. This allows the system to make minor adjustments to the rudder to stay on course. Also note the dead band (relating to the rudder sense setting) this accounts for excessive play in the rudder and reduces the rudder 'hunting' effect.

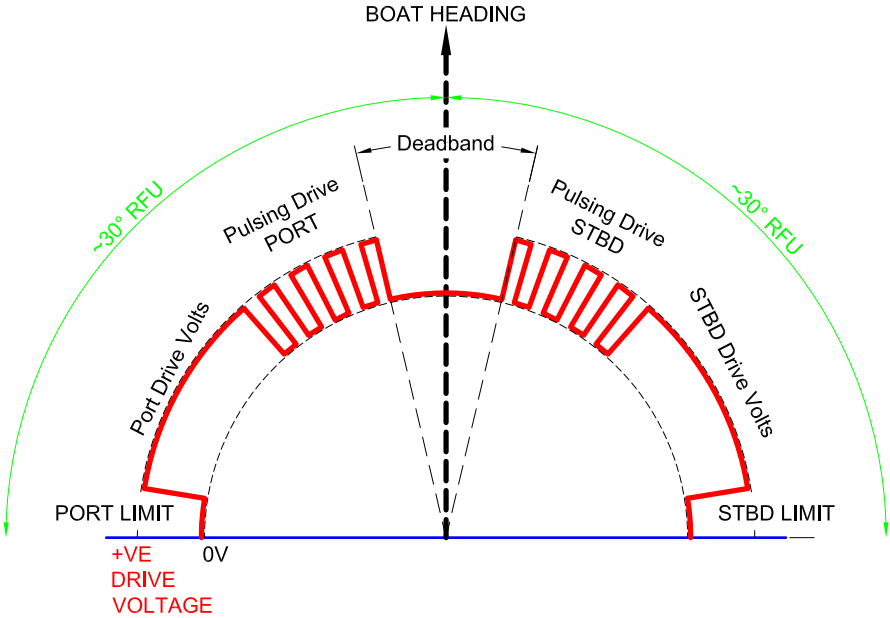

System Settings

Pilot Settings

To access the AP47C Settings menu

Press the **MODE** button.

NOTE: *AP47C Settings can be modified at any time, while using any of the modes.*

To increase or decrease any AP47C settings press ◀ or ▶

Continuously press **MODE** to scroll between each of the AP47C Settings, or to return to main screen (or wait 5 seconds).

NOTE: *Any modified setting will be automatically saved and stored in memory.*

Pilot Settings Explained (RFU Mode)

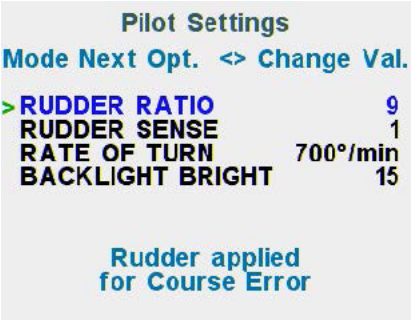

RUDDER RATIO (Gain) *Range: 1-40 Default: 15*

Controls the amount of drive / rudder applied for a given off-course angle.

In general, a vessel with fast turning rate will require a lower value.

This may be adjusted according to vessel speed. I.e. Low speeds may require a higher value, as the vessel will respond slower to larger rudder movements at lower speeds.

NOTE: *If the vessel is understeering and taking a long time to get back on track, increase this value. If the vessel is over-steering or overshooting and making hard turns to stay on track, decrease this value.*

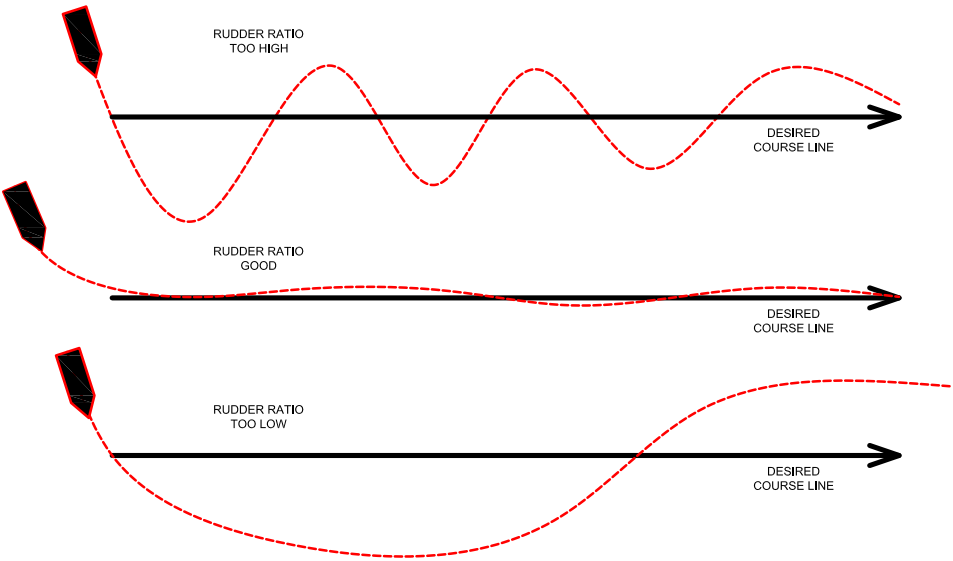

RUDDER SENSE (Sensitivity)
Range: 1-10 Default: 1

The acceptable amount of off-course error allowed for minor rudder corrections.

Increasing this value reduces the amount of pulses used to keep the vessel on course.

If the vessels rudder is continuously hunting, always increase this value to avoid damaging the drive unit.

This value should also be increased in poor weather conditions. For example, when going up a wave the vessels course may move +6 degrees, on the way down the vessel corrects itself -6 degrees naturally, therefore Rudder Sense value should be increased. Otherwise, the AP47C will correct the course change and drive the rudder on the way up the wave, in turn causing the vessel to oversteer when moving down the wave, therefore resulting in excessive unnecessary rudder corrections.

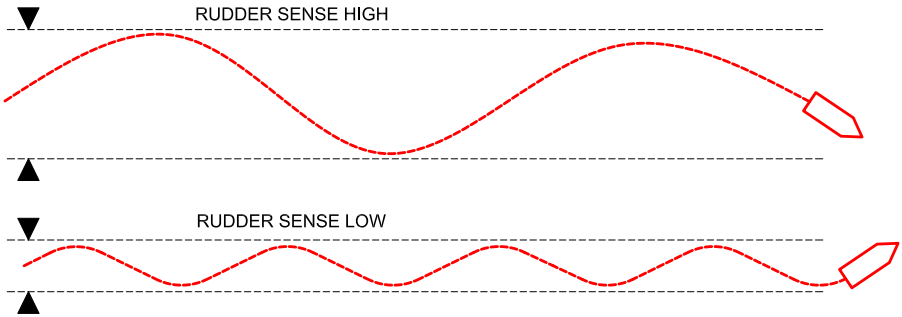

RATE OF TURN
Range: 10-720 (degrees/min) Default: 700

Limits the rudder drive when the AP47C detects the vessel is turning too fast.

I.e. if the rate of change in heading exceeds this value, the AP47C system limits the rudder drive to limit high speed turns. If this setting is too low, the vessel may understeer when changing course.

Backlight Bright
Controls the brightness and display mode of the LCD display.

To switch between Day/Night modes;

Select the BACKLIGHT BRIGHT setting using the **MODE** button;

To switch to Night mode or dim the LCD screen, press and/or hold ◀

To switch to DAY mode and increase brightness, press and/or hold ▶

Pilot Settings (Non-RFU Mode)

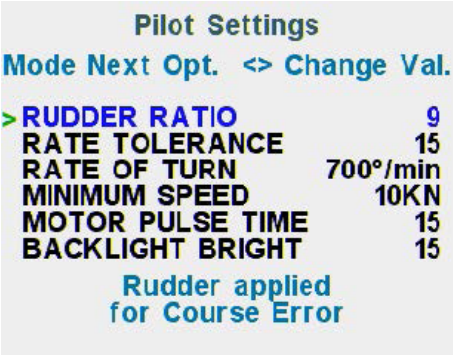

RUDDER RATIO (Gain)
Range: 1-40 Default: 15

See item 1 on previous page

RATE TOLERANCE
Range: 1-99 Default: 1

Determines the minimum 'Rate of Turn' value before applying counter rudder.

When using non-RFU mode, the AP47C uses ROT to determine how much rudder must be applied to keep the vessel on course. Increasing this value will limit the amount the AP47C pulses the rudder drive when making minor course corrections. i.e.

RATE OF TURN
(Maximum - °/min)
Range: 10-720 Default:700

See item 3 on previous page

MINIMUM SPEED
Range: 3-99kts Default: 10KN

This sets the minimum operating speed of the vessel when switching over to AUTO or GPS mode. If the vessel does not exceed this speed when switching over to AUTO or GPS mode, the AP47C will Alarm and revert back to Manual Mode. Since the system in Non-RFU mode requires ROT for determining the amount of rudder driver required, the vessel must be moving at speed for obtaining an accurate ROT.

MOTOR PULSE TIME
Range: 1-100 Default: 15

Non-RFU mode only uses pulses of current in order to drive the motor. This adjustment sets the size of the pulse.

The more responsive the vessel is to the rudder movement, the lower this setting should be. Usually, for larger boats with slow rudder speed, a longer pulse is required to drive the motor.

Backlight Bright

See item 4 on previous page

Advanced Menus (Install Options)

NOTE: *You must be in Manual Mode to access these menus.*

Non-RFU mode – Install Options Menu

RFU mode – Primary Menu

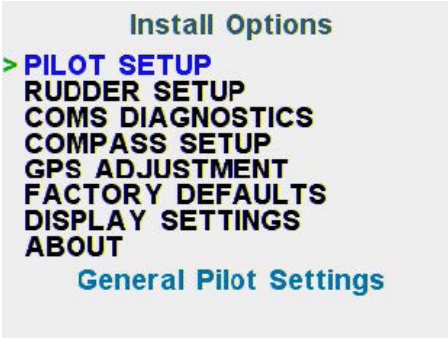

To Access 'Install Options' menu

Press [MODE] button once while in Manual Steer mode.

Then from the Pilot Settings screen, simultaneously press both [MODE] & [AUTO]

To navigate the 'Install Option' menu

Press [◀] or to [▶] select a desired menu,
then;
Press [AUTO] to enter the desired menu.

To modify any option or value in any of these menus

Press [AUTO] on the item you wish to change;

Press [◀] or [▶] to change a value or option of the selected item.

Press [AUTO] again to save.

Press [MODE] to return to the previous menu (or wait 5 seconds)

Advanced Menus (Pilot Setup Explained)

USE RFU
Values: YES / NO Default: YES

Enable only if a RFU is connected.

Note that if the RFU is enabled and the RFU fails, the system will automatically revert to NON-RFU mode. Therefore it is recommended to test and sea trial both modes with this setting off and on.

SWAP DRIVE OUTPUT
Values: YES / NO Default: NO

A handy function to reverse the motor drive output in case the motor is driving in the wrong direction.

SOLENOID
Values: NEGATIVE / POSITIVE Default: NEGATIVE

For setting the drive output polarity for solenoid drive systems.

Set to Negative if solenoids have a common positive connection to battery

Set to Positive if solenoids have a common negative connection to battery

DEAD BAND
Range: 1 – 20 (degrees) Default: 10

Adjusts the amount the rudder is allowed to “wander” before the autopilot reacts to correct any change. This value has a similar effect to the ‘Sensitivity’ setting in the primary PILOT Settings.

REVERSE DELAY
Range: 1 to 99 Default: 5

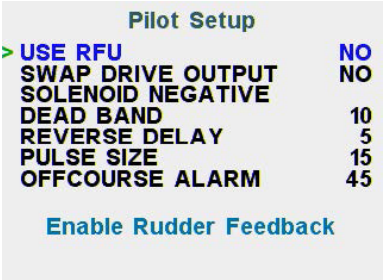

Sets the time delay when the AP47C changes the motor direction (i.e. Port to Starboard or Starboard to Port changes) this setting can prevent shock load and over current on the drive output, since reversing motors and solenoids need time to discharge before driving in the opposite direction.

PULSE SIZE:
Range: 1 to 50 Default: 15

When the vessel is near to the desired position/course, the drive motor will be pulsed to make minor adjustments. A larger pulse size may be required for less responsive vessels with slower steering pumps. (E.g. larger boats with high rudder inertia require larger pulse size values.)

OFFCOURSE ALARM
Range: 1 to 180 (degrees) Default: 45

The AP47C system will alarm when the difference between the vessels heading and desired course to steer, is greater than this value.

Initial Setup

Installer's Instructions

NOTE: *Before powering the system for the first time follow the initial inspection & testing procedures.*

Advanced Menu - Install Options > Pilot Setup

If a RFU is installed, change USE RFU to YES.

Return to Manual MODE and drive the motor Port and Stbd. If the drive motor is moving the rudder in the wrong direction, change SWAP DRIVE OUTPUT to YES.

If using a constant running motor, check the solenoid common terminals are wired as per the installation wiring Diagram (to Battery +VE) In this case, ensure that the Solenoid Negative setting is used.

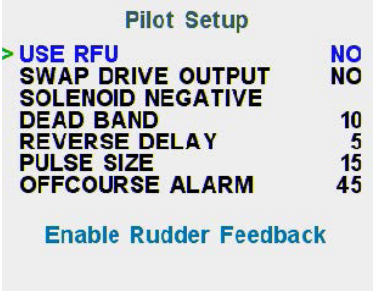

Calibration

Rudder Feedback Calibration

Advanced Menu - Install Options > Rudder Setup

Setup and calibrate the rudder feedback positions in this order:

End Port limit > End STBD limit > Set RFU Center

To set each limit, manually steer the vessel using the helm wheel or by pressing the < or > button. Be careful not to overdrive the rudder past the limit as the software limits are disabled in this mode.

During Calibration also check the rudder drive direction is correct.

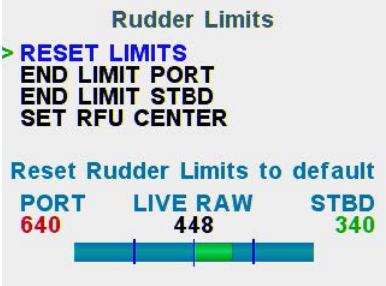

Compass Calibration

Advanced Menu - Install Options > Compass Setup

If necessary, the E-Compass can be calibrated to compensate for local magnetic influences of the vessel. To carry out this procedure the boat must be in calm open waters and be able to safely turn around a 360º round track at a consistent low speed.

NOTE: *The standard E-compass is factory calibrated and only offset settings should need to be changed if the installation position is ideal as per the previous instructions*

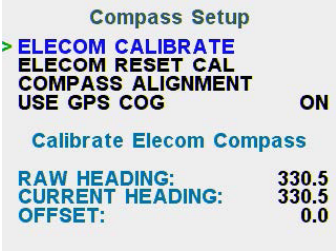

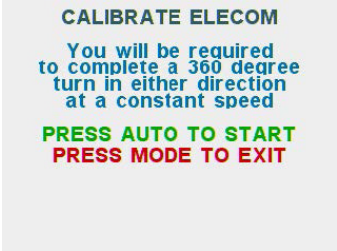

To Calibrate the E-COMPASS:

- Go to the CALIBRATE ELECOM screen in the Install Options > Compass Setup menu
- Start turning the boat at low speed, holding the turn at a constant rate, then press AUTO
- A GREEN progress bar will be displayed.
- Continue turning the vessel slowly until the message 'CALIBRATION PASSED' is displayed

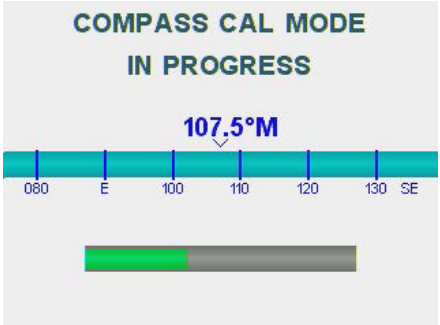

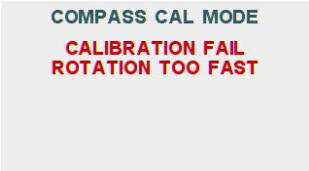

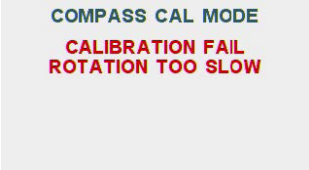

(Above) If you are turning too fast or too slow, a 'CALIBRATION FAIL' message will appear and you will be required to start the process again.

Compass Calibration

Adjusting Compass Offsets

After the E-compass is calibrated, find the bearing from the boat position to a known visible object. Use a chart or a chart plotter. Steer the boat so that the centre line of the boat is aligned with the bearing line pointing towards the object.

Change the correction offset parameter so that the bearing to the object and the compass readout becomes equal.

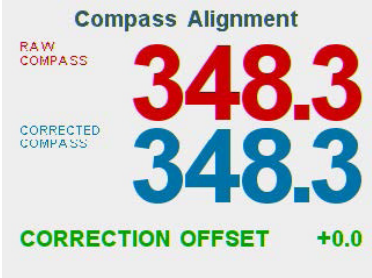

NOTE: *Make sure that both the compass heading and the bearing to the object have the same unit (°M or °T).*

NOTE: *If a GPS system is connected, it is recommended to enable the 'USE GPS COG' setting. If the E-compass fails the GPS 'COG' heading' will be used in this case, although will not be as accurate since the update rate will be much lower and COG does not work well until the vessel is moving.*

GPS Settings

GPS Settings

Advanced Menu - Install Options > GPS Settings

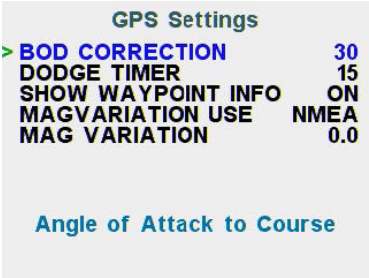

BOD CORRECTION
Values: 1-50 Default: 30

This value increases or decreases the angle of attack from a GPS / PC supplied XTE (cross track error) when in GPS mode.

DODGE TIMER
Values: 1-100 Default: 15

The amount of time the AP47C drives the rudder (using pulses) to dodge an obstacle when in GPS mode.

SHOW WAYPOINT INFO
Values: ON/OFF Default: ON

Displays the GPS target waypoint information received when in GPS mode.

MAG VARIATION USE
Values: NMEA/MANUAL
Default: NMEA

Sets which source controls MAG Variation. I.e. Data supplied via GPS NMEA or set manually (see below)

MAG VARIATION
Values: 30.0E - 30.0W Default: AUTO

Magnetic compass variation offset value for the area of operation.
It represents the angle on the horizontal plane between magnetic north (the direction the north end of a compass needle points, corresponding to the direction of the Earth's magnetic field lines) and true north (the direction along a meridian towards the geographic North Pole). This angle varies depending on your position on the Earth's surface and changes over time.

Other Menu Items

Setting up and configuring your GPS system

* Refer to your GPS systems installation manual for this section;

- Set GPS NMEA port to output 4800 baud
- Enable at least one of the following sentences on the GPS NMEA port connected to the AP47C:

  1. APA
  2. APB or;
  3. BOD and XTE

- Set GPS Arrival zone limit to at least 0.05nm (lower for smaller / slower vessels)
- Set GPS XTE limits to 0.01nm (higher for larger vessels)
- Enable “auto sequence” if applicable - for automatically confirming the next waypoint when following a route.
- Enable the sentences GLL, RMC, SOG, & VTG for the AP47C to indicate GPS position and for Speed over Ground information. Otherwise the AP47C will not function in ‘Non-RFU’ AUTO or GPS modes.

NOTE: *** If only XTE information is available from your GPS unit then your vessel must be heading towards the desired target/course before engaging the GPS mode. The “Auto Sequence” feature will not be available in this situtation.*

Factory Reset

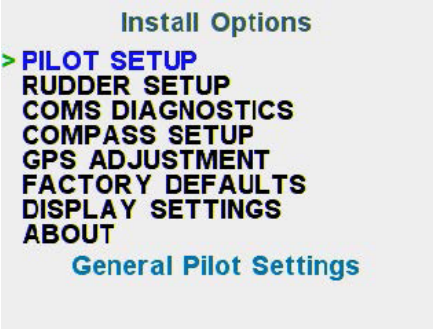

This will reset all systems settings to default values

Enter the advanced menu – Install Options. Select FACTORY DEFAULTS. Press AUTO to enter and follow the instructions on the screen. The unit will ‘Beep’ once completed and all settings will be restored to defaults.

Communications Diagnostics

The check if NMEA messages are received correctly, use the advanced menu – Install Options – COMS DIAGNOSTICS page. If a NMEA sentence is correctly received, the sentence turns **GREEN**

To check the incoming data on PORT 1 (i.e. the 6-pin LTW - NMEA I/O port labeled RUDDER) press ◀

To check the data messages on PORT 2 (i.e. the 6-pin LTW - NMEA I/O port labeled COMPASS) press ▶

Other Menu Items

Display Settings

To enable or disable any of the extra information indicated on the LCD, use the DISPLAY SETTINGS menu found on the Advanced menu – Install Options page:

About Page

This page is used to check hardware version and firmware build dates, for each core.

If this manual does not match your system, please contact TMQ for a firmware update.

Initial Inspection and Testing

- [ ] Confirm power to be connected is the required DC voltage.
- [ ] Power Supply 12V-24V DC is available.
- [ ] Ensure polarity of the voltage supply is correct.
- [ ] All electrical connections are correct.
- [ ] Loose cables are clipped or tied up.
- [ ] Any un-used connections are isolated and/or sealed.

Your system should now be ready to power on.

Dockside Tests

- [ ] Turn steering wheel fully clockwise.
- [ ] Visually check moving (mechanical) parts do not foul;
- [ ] Repeat 1st step for anti-clockwise direction.
- [ ] Return Steering to centre.
- [ ] Switch on AP47C AUTOPILOT system
- [ ] Press arrow button to operate steering in that direction
- [ ] Check that rudder moves in correct direction does not drive past limits
- [ ] Check RFU calibration is set if limits are not set
- [ ] Check Course change provides sufficient Rudder movement. (Auto mode)
- [ ] Check compass heading display on AP47C is available.
- [ ] Return steering to centre.
- [ ] Check GPS settings are correct as per section

IMPORTANT: *Always initially test system at low speeds first in open water during calm conditions.*

Error Messages

There are a number of possible error messages that can be displayed on screen

MOTOR SHORT
Over current detected on motor wires

CLUTCH SHORT
Over current detected on clutch wire

OFF COURSE
Vessel is more than the set off course ° from Target Heading.

RUDDER AT LIMIT
Rudder has reached the set end stop

RFU DISCONNECTED
Cannot detect the rudder feedback unit

GPS – NO GPS DATA
No NMEA XTE and no BOD received

GPS – NO GPS XTE
No NMEA XTE or APB XTE or RMB XTE received

GPS – NO GPS BOD
No NMEA BOD or APB BOD received

NO XTE – SET DEST
User needs to set a destination waypoint in GPS / PC

VESSEL TOO SLOW
Vessel is too slow to maintain steering without rudder feedback.

NO COMPASS
Compass/Heading data missing * the compass bar will disappear.

Alarms

A number of conditions will cause the AP47C to sound and flash the alarm message on the display.

Off Course Alarm

In AUTO mode an audible alarm of 3 “beeps” per second will sound when boat heading is greater than 45º from the desired course. A red message will also be displayed on the screen

GPS Alarm

In GPS steering mode an audible alarm of 1 “beep” per second will sound when no GPS data is received by the AP47C. A red message will also be displayed on the screen.

Compass Alarm

If there is no reading from a compass, or no HDM / HDT data incoming, an audible alarm of 1 “beep” per half-second will sound. A red message will also be displayed on the screen.

Low Speed Alarm

When used without a rudder feedback (RFU), if the vessel speed goes below the low speed threshold set in the settings, an audible alarm of 1 “beep” per second will sound. A red message will also be displayed on the screen.

Troubleshooting

AP47C Display is completely Black

- [ ] Check power is available: 12V-24VDC
- [ ] Check boat master switch for AUTOPILOT
- [ ] Check circuit breaker (if applicable)
- [ ] Check in-line fuse of AP47C red wire
- [ ] Check all wiring connections AP47C
- [ ] Check Backlight setting

AP47C does not move rudder when AUTO is selected

- [ ] Confirm AP47C display is showing compass heading information & No alarm situation.
- [ ] Check voltage is present at the AP47C motor connections (Yellow and yellow with black stripe) when AUTO is selected and a course change is applied.
- [ ] Confirm that the supply voltage is 12V-24VDC (Red and Black).
- [ ] Check all motor and clutch wiring
- [ ] Check motor is functioning in manual mode, then check motor brushes
- [ ] Check the hydraulic system is operational:

1. Ensure there is sufficient hydraulic fluid.
2. Purge the system of possible air locks / contamination.
3. Ensure that any flow restricting valves are not completely closed.
4. Check all hydraulic connections for leaks.

Troubleshooting - continued

AP47C Display will not change from MANUAL STEER mode.

- [ ] Vessel speed may be below the set threshold, if USE RFU is set to NO.
- [ ] Check speed setting in the AP47C settings
- [ ] Vessel must be moving forward at or higher than that set speed.

AP47C does not follow a waypoint or route

- [ ] Check GPS plotter waypoint or route is set to ‘go-to’ or activated.
- [ ] Check GPS mode is selected on AP47C
- [ ] Check alarm status of AP47C
- [ ] Ensure that the GPS unit has the correct magnetic correction factor.
- [ ] Check AP47C compass alignment and possible magnetic interference

No GPS Data Alarm

- [ ] Check wiring of the GPS to the AP47C unit.
- [ ] Check sentence in GPS unit for correct data output (APA/APB/BOD & XTE)
- [ ] Check route is set up or selected in the GPS unit
- [ ] Check location fix at the GPS unit.

Declaration of Conformity

(MANUFACTURERS DECLARATION)

Manufacturer: TMQ Electronics
PO BOX 3348
Tingalpa, QLD 4173
Australia
Tel: +61 7 3640 5600
Fax: +61 7 3640 5699

Declares under our sole responsibility that the products:

AP47 Display, Rudder Feedback Unit, Compass, all units interconnected with necessary cables and external connections as a system to which this declaration relates, is in conformity with Standard(s):

EN60945/1997
CEI IEC945/1996

For TMQ International Pty. Ltd.
Murarrie Queensland Australia.

28th February 2020
Dale Sinclair, Manager

Warranty

TMQ products are thoroughly inspected and tested before shipment from the factory and are warranted to be free of defects in workmanship and materials for a period of one year from the date of shipment from the factory.

This warranty is extended to and is solely for the benefit of the original consumer purchaser.

All units in need of repair will be repaired without charge to the purchaser during the above mentioned period in accordance with the following terms and conditions:

1. The defective unit is returned "freight prepaid" to TMQ Marine Electronics : Unit 18, 17 Rivergate Place, Murarrie QLD 4172
2. Proof of purchase is supplied and original Serial Numbers on equipment have not been changed.
3. Information is provided regarding the nature of the failure or problem occurring.
4. A return address is supplied to enable the equipment to be returned by road freight. Any other means of transport will be charged to the customer's account and must be paid in advance.

This warranty does not cover defects or damages caused by unauthorised service or damage through accident, misuse or abuse. The owner is also responsible for providing reasonable maintenance and weather protection of the equipment.

TMQ shall not be liable for damage or loss incurred resulting from the use and operation of this product.

TMQ reserves the right to make changes or improvements to later models without incurring the obligation to install similar changes to equipment already supplied. Some states do not allow the exclusion or limitation of incidental or consequential damages; therefore the above limitations or exclusions may not apply to you.

This warranty gives you specific legal rights and you may also have other rights, which vary from state to state.

Additional Information

Email: tmq@tmq.com.au

Visit the website: www.tmq.com.au

Unit 18, 17 Rivergate Place
Murarrie QLD 4172

T: +61 07 3640 5600
E: tmq@tmq.com.au
www.tmq.com.au